Electrolux PROFESSIONAL

High Productivity Cooking Touchline tilting pressure braising pan, gas (61,362BTU), 24 gal (90 lt)

ITEM #

MODEL #

NAME #

SIS #

AIA #



587027 (PUET09GCWU) Touchline tilting pressure braising pan, gas (61,362BTU), 24gal capacity (90lt) - 120V/1p/60Hz

Short Form Specification

Item No.

AISI 304 stainless steel construction. GN compliant pan size; 0.7" (18mm) thick pan bottom 0.6" (15mm) mild steel and 0.1"(3mm) AISI 316 stainless steel. Insulated and counterbalanced lid. Motorized tilting with variable speed control. Pan can be tilted beyond 90° to completely empty the food. Robust multiple burners with electronic ignition and monitoring. Safety thermostat protects the pan from overheating. A precise, electronic control of pan bottom temperature ensures fast reaction and exact adherence to pre-selected cooking temperatures between 122°F and 482°F (50°C and 250°C). Automatic steam elimination at the end of the cooking cycle.It can be used for poaching or steaming (with the lid open); simmering and boiling (with open or closed lid). TOUCH control panel. SOFT function. PRESSURE function. IPX6 water resistant. Configuration: Free-standing or Against a wall. Installation options (not included): floor mounted on 8" (200mm) high feet or a plinth which can be either steel or masonry construction.

Main Features

- Multifunctional cooking appliance used for roasting, pot-roasting, braising, simmering, boiling, pressure cooking and steaming.
- Pan size is GN compliant.
- Temperature sensors provides efficient temperature control: the power is supplied as and when required to keep the set temperature value without exceeding it.
- Easy to clean cooking surface due to large-radius edges and corners.
- Cooking with a working pressure of 6.5psi (0.45 bar) reduces cooking times.
- Optimum heat distribution in the food provides best cooking results in terms of taste, color and consistency and in terms of vitamin preserving.
- Safety mechanism prevents lid from opening, even in case of voluntary attempt, when cooking under pressure.
- Overnight cooking: saving electricity and time.
- Safety valve on the lid avoids overpressure in the food compartment.
- IPX6 water resistant.
- Motorized, variable pan tilting with "SOFT STOP". Tilting and pouring speeds can be precisely adjusted. Pan can be tilted over 90° to facilitate pouring and cleaning operations.
- "Pressure function": once the pressure lid is locked, the system automatically regulates itself.
- Built in temperature sensor to precisely control the cooking process.
- No overshooting of cooking temperatures, fast reaction.
- USB connection to easily update the software, upload/ download recipes and download HACCP data.

Construction

- External panelling and internal frame made of 1.4301 (AISI 304) stainless steel.
- Multipurpose non-stick cooking surface in 0.75" (18 mm) thick compound: 0.1" (3 mm) shot-blasted 1.4404 (AISI 316L) stainless steel surface, seamlessly welded to the mild steel bottom.
- Double-lined insulated lid in 1.4301 (AISI 304) stainless steel mounted on the cross beam of the unit, counterbalanced by a hinge that remains open in all positions.
- Gas appliance has robust multiple burners with electronic ignition and monitoring for a safer operation. Operation with natural gas and LPG (on request).
- Water mixing tap is available as optional accessory to make water filling and pan cleaning easier.
- Pressure lid fitted with a proven fast-acting lock which is simple and safe in operation.
- Heatproof handle with non-slip surface.
- Front-mounted inclined led “TOUCH” control panel with recessed deep drawn casing, features self-explanatory display functions which guide operator throughout the cooking process: simultaneous display of actual and set temperature as well as set cooking time and remaining

APPROVAL:

Electrolux Professional, Inc.
www.electroluxprofessional.com
4003 Collins Lane Louisville, KY 40245 USA - fax number: 706-447-6228

Electrolux PROFESSIONAL
High Productivity Cooking
Touchline tilting pressure braising pan, gas (61,362BTU), 24 gal (90 lt)

cooking time; real time clock; "SOFT" control for gentle heating up for delicate food; 9 power simmering levels from gentle to heavy boiling; timer for deferred start; error display for quick trouble-shooting.

- Minimised presence of narrow gaps for easier cleaning of the sides to meet the highest hygiene standards.
- "Boiling" or "Braising" mode functions.
- Can be prearranged for energy optimisation or external surveillance systems (optional).
- 98% recyclable by weight; packaging material free of toxic substances.
- Model equipped with TDO valve available as special execution (S/code request)
- [NOT TRANSLATED]
- [NOT TRANSLATED]
- [NOT TRANSLATED]

User Interface & Data Management

- Connectivity ready for real time access to connected appliances from remote and data monitoring (requires optional accessory – contact the Company for more details).

Sustainability

- High-quality thermal insulation of the pan saves energy and keeps operating ambient temperature low.

Optional Accessories

• Suspension frame for Pressurized Tilting Braising Pans - 2 needed for 24 gallon units (587021, 587027) - 3 needed for 45 gallon units (587025, 587028)	PNC 910191	❑
• Base plate, for pressure braising pans and non-pressure braising pans, half size - 2 needed for 24 gallon units (587031, 587037, 587021, 587027) - 3 needed for 45 gallon units (587035, 587039, 587025, 587028)	PNC 910201	❑
• Perforated container with handles, height 4" (102mm)	PNC 910211	❑
• Perforated container with handles, height 6" (152mm)	PNC 910212	❑
• Perforated container with handles, height 8" (203mm)	PNC 911673	❑
• Left cover plate and mixing faucet for kettle (587040), and all braising pans (587037, 587039, 587031, 587035, 587027, 587028, 587021, and 587025)	PNC 911819	❑
• Spray gun for tilting units, height 27-1/2 " (698.5mm) - factory fitted	PNC 912776	❑
• SCRAPER WITHOUT HANDLE (PFEX/ PUEX)	PNC 913431	❑
• - NOT TRANSLATED -	PNC 913432	❑
• 4 flanged feet, 2", for prothermetic units (kettles, braising pans & pressure braising pans)	PNC 913438	❑
• - NOT TRANSLATED -	PNC 913575	❑
• - NOT TRANSLATED -	PNC 913577	❑
• Spray gun kit for free-standing ProThermetic Tilting units H=700 - US - Field Mounted	PNC 913579	❑

High Productivity Cooking
Touchline tilting pressure braising pan, gas (61,362BTU), 24 gal (90 lt)

Front

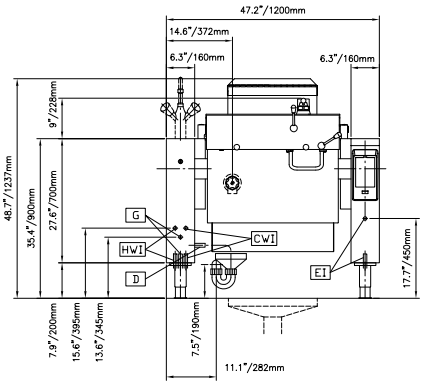

Side

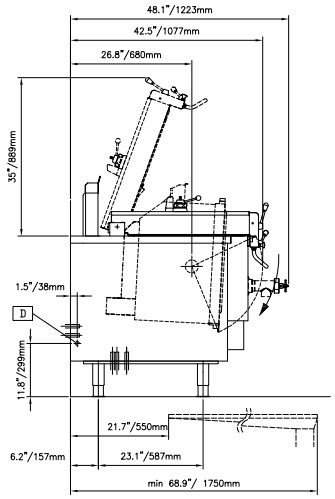

CWI1 = Cold Water inlet **G = Gas connection**

D = Drain
EI = Electrical connection

Top

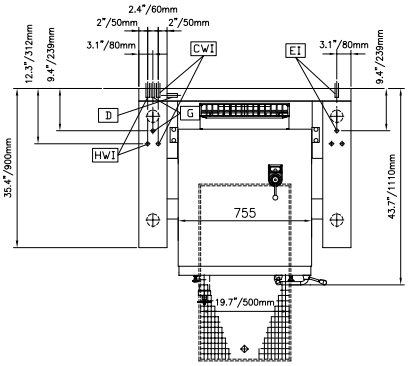

Electric

Supply voltage:	120 V/1 ph/60 Hz
Total Watts:	0.25 kW

Gas

Gas Power:	61416 Btu/hr (18 kW)
Gas Type Option:	Propane
Gas Inlet:	3/4"

Water:

Pressure:	29-87 psi (2-6 bar)
Drain line size:	1/2"
Incoming Cold/hot Water line size:	1/2"

Installation:

Type of installation:	FS on concrete base;FS on feet;On base;Standing against wall

Key Information:

Working Temperature MIN:	122 °F (50 °C)
Working Temperature MAX:	482 °F (250 °C)
External dimensions, Width:	47 1/4" (1200 mm)
External dimensions, Depth:	35 7/16" (900 mm)
External dimensions, Height:	27 9/16" (700 mm)
Net weight:	529 lbs (240 kg)
Shipping width:	52 " (1320 mm)
Shipping depth:	49 5/8" (1260 mm)
Shipping height:	58 1/4" (1480 mm)
Shipping weight:	963 lbs (437 kg)
Shipping volume:	86.92 ft³ (2.46 m³)
Configuration:	Rectangular;Tilting
Heating type:	Direct
Tilting mechanism:	Automatic

The company reserves the right to make modifications to the products without prior notice. All information correct at time of printing.

2026.11.23